The Next Dimension of 3D Imaging

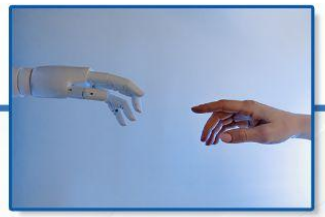

2024 CATALOG

DR • 3DCT • PACS

CALIFORNIA, USA

Image Capture Review

CLARIS XT

CELEBRATING

3 2 – YEARS

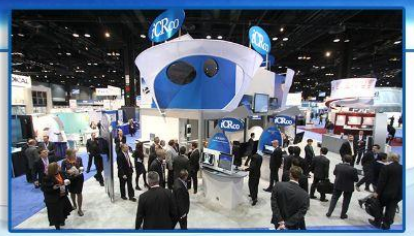

ABOUT THE COMPANY

Stephen Neushul began his career as an engineer working with a team that created NASA designs used on the International Space Station.

In 1990 Stephen launched iCRco Inc. an engineering and design manufacturer of X-ray imaging solutions for Medical and Non-Destructive Testing applications. In its 32 year history, iCRco has provided a full range of digital imaging solutions including cassette workflow, direct capture, and 3DCT that integrates seamlessly into its proprietary acquisition, practice management, and image archiving softwares.

Today, iCRco is a globally-recognized imaging company with approximately 2 billion images captured and installations in over 200 countries worldwide.

iCRco

THE POP CULTURE

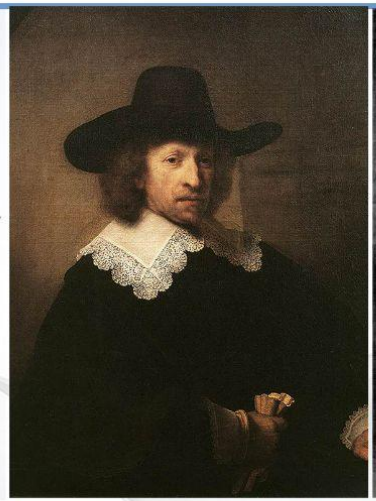

NATIONAL GEOGRAPHIC

CBCT BACKGROUND

Volumetric Computed Tomography, commonly known as “Cone Beam” currently represents the highest level of resolution imaging capable for veterinary medicine.

CBCT Technology was first introduced in 1996 emanating from Dental Diagnostics. The imaging area resides inside the ring tunnel known as the Gantry.

The **Claris XT CBCT** Gantry has a very large diameter, up to 79 cm, providing diagnosis of small and large anatomy powered by 5kW and 18kW options.

HOW THE CBCT WORKS

The **Claris XT CBCT** produces three-dimensional X-ray images.

Helical thin axial slices are generated as cone-shaped X-ray beam in the CBCT rotates around the area to be diagnosed in the volumetric scan. The area under study remains stationary in the X-ray beam, as opposed to the standard tomography image in which the area under study has to move through the beam.

Depending on the CBCT device and the available size of the digital at panel detector, one rotation of the conical X-ray beam is sufficient to completely cover the diagnosed areas.

The performed scan can be viewed on a PC after a short time.

BETTER RESOLUTION, HIGHER DIAGNOSTIC ACCURACY:

Many CT scanners obtain images very 1 to 3 mm whereas the **Claris XT CBCT** slice thickness is 0.1 to 0.4 mm. The CBCT slice thickness is far smaller and more precise providing more detailed imaging of small structures.

CBCT CHARACTERISTICS

LOWER RADIATION DOSE

This is achieved when the cone-shaped beam passes only once around the patient, thereby exposing the patient to a less dose.

“INSTANT IMAGES”

Through its advanced processing, the **Claris XT CBCT** delivers INSTANT x-ray and volumetric reconstruction.

MOBILE

The **Claris XT CBCT** does not require permanent installation to the floor, it can be wheeled around as needed.

INCREASED VISUALIZATION

Provides detailed mapping of the smallest anatomical structures, such as hands or feet, which allows for instant surgical planning, general diagnostics and treatment plans at the point of care.

INSTALLATION ADVANTAGES

The regulations for a standard X-ray room apply. No major reconstruction of rooms or heavy air-condition standards need apply. A true “**PLUG & PLAY”** solution with same day installation and use. The system delivers 3D reconstructions of teeth, skull, bones and soft tissues,

DYNAMIC APPLICATION USE

Claris XT CBCT can project amazing complete images in an astonishing 17”x17” (43 cm x 43 cm) field of view. The result of our work is a streamlined, versatile while using a dynamic cesium detector for 3D and standard X-ray capability.

CBCT CHARACTERISTICS

140 Micron Pixel Pitch
85 Micron Voxel Pitch

FULL DIAGNOSTIC XRAY
FLUOROSCOPY

430 x 430 mm (17” x 17”)
Sensor Size

COMPUTED TOMOGRAPHY (CT)
HIGH RESOLUTION

16 Bit Large Area
Dynamic Sensor

COMPETITIVE PRICE
ULTRA LOW-DOSE

CBCT WORKFLOW

IMAGE

Claris XT | Tomography

Claris XT with Cesium Sensor detector technology, allowing for a larger field-of-view, full chest X-Ray image with superior image quality. The Claris XT is capable of replacing your entire X-Ray room in a smaller, more efficient form factor.

CAPTURE

XC ICE-4 | Acquisition

XC touchscreen acquisition with ICE-4 Enhancement Processing provides all-new features including, “Image Display State” to ensure balanced presentation of both soft tissue, overlapping bone structures, and automatic analysis of image characteristics to optimize processing.

REVIEW

Clarity PACS | Archive

Our fully web-enabled and integrated PACS solutions help transition your practice into a safe, secure, and filmless environment. Clarity PACS™ supports all your current and future imaging needs.

CBCT SOFTWARE OVERVIEW

3D RECONSTRUCTION **OPTIONS**

XC™ 2.0

iCRco takes XC 2.0 acquisition software to new levels with its all new ICE-4 processing, the next level of image clarity enhancement. XC provides simple and intuitive work ow while ICE-4 provides you with consistently high image quality you need to support your diagnosis, while saving you both time and effort.

Effortlessly send images to your PACS system and pull patient demographics from your electronic health records management systems like RIS, HIS and EMR.

Depend on XC and ICE-4 to provide the quality and assurance you need today's fast paced healthcare system.

Clarity PACS

Next-Level Picture Archiving Communications Platform. Clarity PACS is a scalable and high-performance, intuitive viewer.

Our PACS system is hand-delivered to you through thousands of hours of coding and development.

Clarity PACS continues to be one of the premiere and highly affordable PACS systems available on the market.

Clarity PACS features include report writing, CD/media burning, DICOM print and send, HL7 integration, full HIPAA compliance and the ability to of complete audit logs.

RadiAnt

PACS DICOM viewer for medical images designed to provide you with a unique experience. RadiAnt DICOM Viewer was designed to use resurfaces as efficiently as possible. It comes equipped with image fusion, image manipulation toolset, multiplanar reconstructions, and supports multiple types of DICOM files.

ANATOMAGE

The Invivo platform provides a modern integrated solution for 3D imaging. By combining industry leading clarity, ease of use, and compatibility, Invivo is the ideal solution for dental, orthodontic, and radiological applications.

CBCT OPTIONS / CONFIG

DID YOU KNOW?

The Claris XT CBCT is mobile device consisting of two modules on locked wheels and connected together with a quick bayonet coupling.

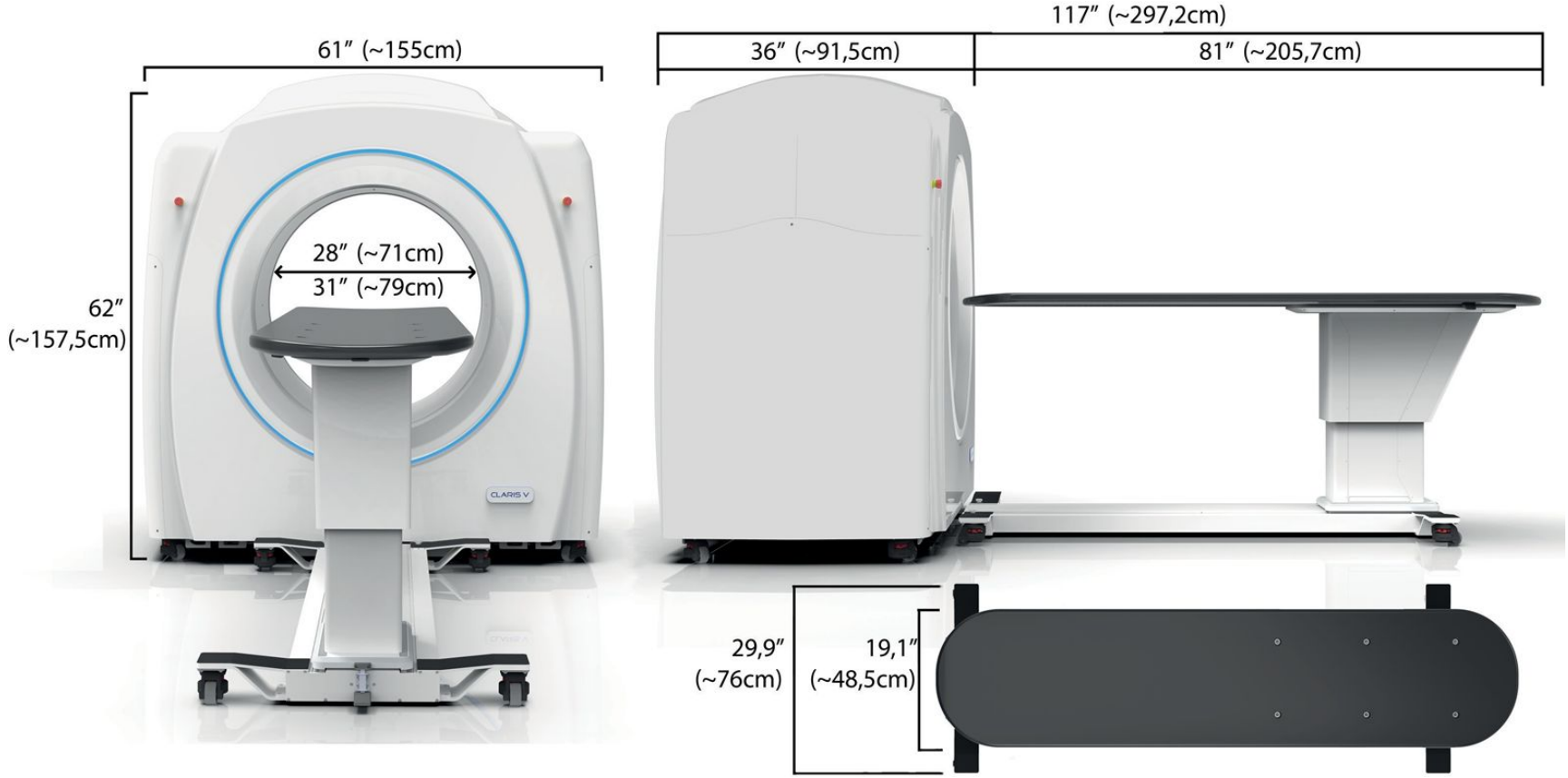

CBCT OPTIONS / CONFIG

Gantry Diameter

Ø 28” (~71cm)
Ø 31” (~79cm)

X-Ray Generator

~ 5 kW (e.g. 100 kV, 50 mA)
~18 kW (e.g. 120 kV, 150 mA)

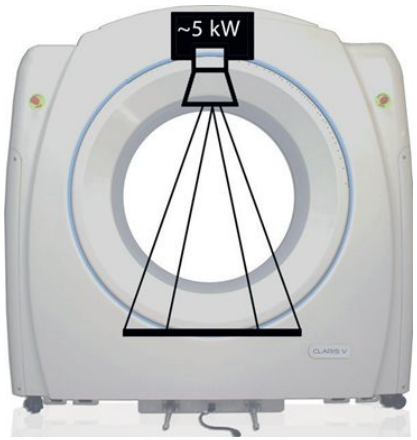

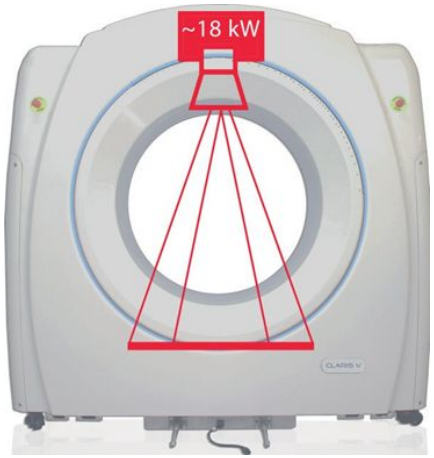

AXIS Motorized Table

- Motorized Z Axis Adjustment
- Robotic X Movement, Mobile
- Attaches to CT Gantry with Locking Interface
- Radio Translucent
- Low Attenuation Carbon Fiber Table Top
- Manual or Robotic Movement
- Adjustable Height

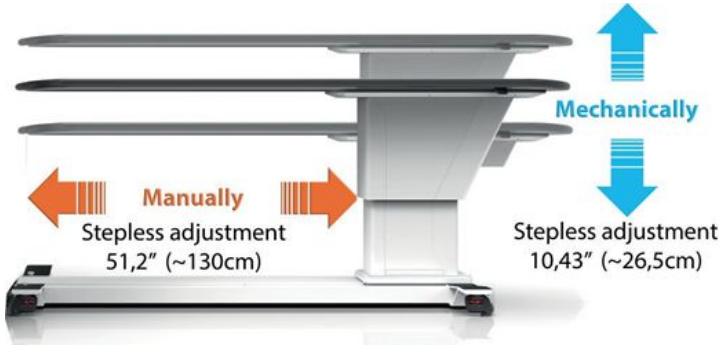

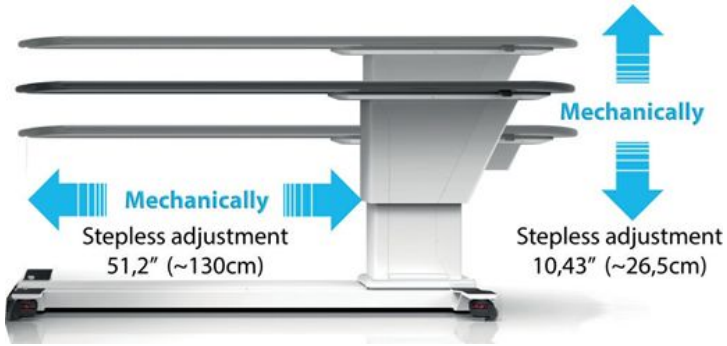

CBCT OPTIONS / CONFIG

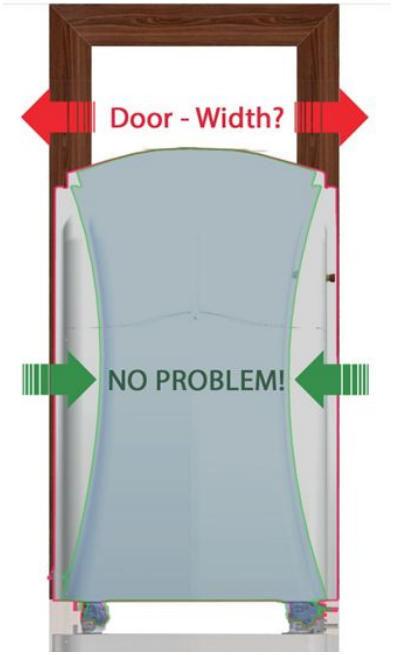

Claris XT CBCT available in various modular options:

STANDARD OPTION
Assembled CT and Assembled Table which only requires connecting both modules together.
USER OPTION
Claris XT CBCT is delivered in configured smaller modules and assembled by our engineers directly on site. The delivery of Claris XT CBCT takes place after individual arrangements with the user.

THE WIDTH OF THE DOOR OPENING IS NOT A PROBLEM!
USER OPTION - must be agreed prior to purchase and delivery.

AXIS motorized table available in various length options:

AXIS TABLE
Regardless of the choice of mechanical or manual control of the table displacement, can be adjusted in length to the individual needs of the user on request. The table can be shortened to the required length, which enables Claris XT CBCT to be used in rooms with different usable surfaces.

AXIS shorter table option - must be agreed prior to purchase and delivery.

The AXIS table can be shortened to any length on request!

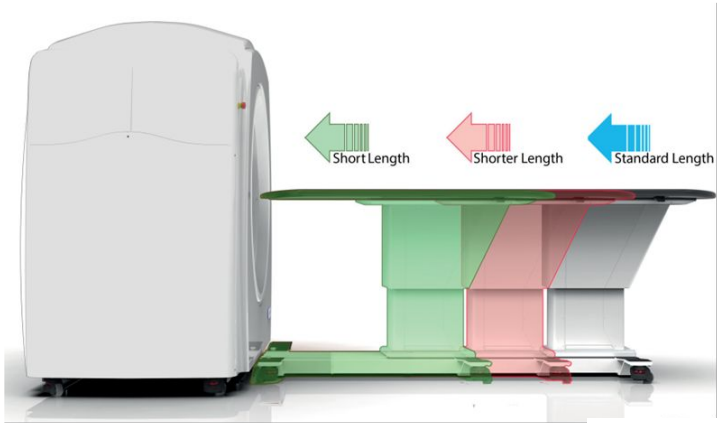

CBCT OPTIONS / CONFIG

Claris XT CBCT & AXIS Patient Table

(client can choose length of the table)

Workstation

Computer PC
(2) 27” High Resolution Monitors
Mechanically Adjustable Table

Acquisition Software

XC™ Acquisition software

RadiAnt™ DICOM VIEWER

Anatomage invivo

Review Software

3D reconstruction software
(various options)

CBCT OPTIONS / CONFIG

CLARiTY PACS™
PACS MADE CLEAR

Clarity PACS™

NAS cloud backup

USB 3.0 32GB MEMORY STICKS

Recording studies &
3D reconstructions for patients.

X-ray Protective Aprons

Thyroid protection & Fingerless X-ray protective gloves

iCRCare

- DELIVERY
- INSTALLATION
- CONFIGURATION
- USER TRAINING
- WARRANTY

iCRCare | Helping You **Protect The Life** of Your Investment

WARRANTY iCRco - Excerpt from Terms and Conditions:

iCRco warrants that each Product, including iCRco software, will be free from defects in materials and workmanship and will operate in material respects in accordance with applicable specifications and manuals provided by iCRco. iCRco makes no other warranties, except warranty of title and no other warranties are implied.

iCRco neither assumes nor authorizes any person to assume for it, any other obligation or liability in connection with any Product provided by it.

SUPPORT - Post-Warranty Period (Additional option to choose from):

- SUPPORT Contract provides on-site service.
- No stress, no worries, no hidden costs

SUPPORT contract cost per year is 10% of the standard retail price to the end-user and is intended for the post-warranty period.
SUPPORT contract may be concluded for a total period of use up to 5 years from the date of purchase (Warranty+Support = 5 years).

SUPPORT contract per year includes:

- All replacement parts, INCLUDING THE X-RAY TUBE
- All relevant online or on-site services
- All software updates and upgrades
- All travel and travel expenses
- Extension or modification of the SUPPORT contract period - Ask us!

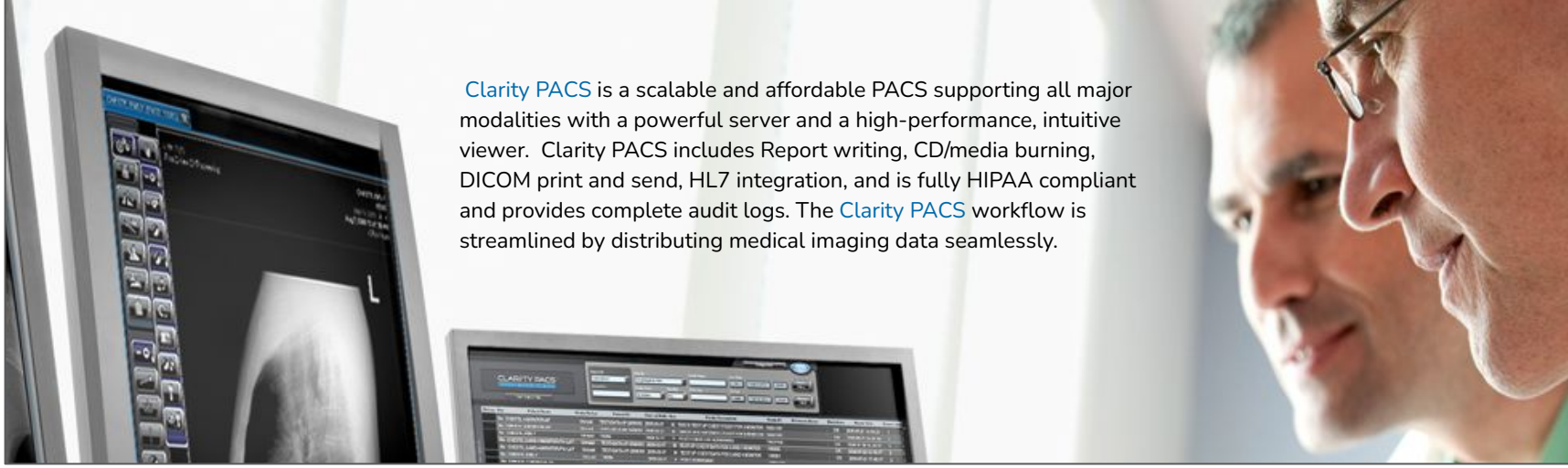

Clarity PACS is a scalable and affordable PACS supporting all major modalities with a powerful server and a high-performance, intuitive viewer. Clarity PACS includes Report writing, CD/media burning, DICOM print and send, HL7 integration, and is fully HIPAA compliant and provides complete audit logs. The Clarity PACS workflow is streamlined by distributing medical imaging data seamlessly.

Clarity Archive Admin

A web based administration tool for a PACS administrator to manage patient data, user accounts and audit repository.

Clarity Management Tool

An application used to setup study forward routing rules and backup schedules to another PACS.

Clarity Input License

Defines the number of modalities that can send images to the Clarity PACS Server. Clarity can accept images from CR, DR, US, MR, CT, US and more.

Clarity DICOM Importer

An application used for importing images in DICOM, JPEG, PNG and TIFF file format as well as documents in PDF format.

Clarity DICOM Print

An application for printing patient's images on a DICOM-compliant Film Printer or a paper printer. The application has a range of print configuration and layout settings for optimal use.

Clarity Patient CD Burning

A feature to create a patient CD with an embedded Clarity Lite Viewer for easy distribution of patient images and report to patients or referring physicians.

Clarity Physicians Portal

Allows PACS administrators to grant access to the PACS archive while limiting displayed information to only the facility, referring physician name, or both.

iClarity Software

When the iClarity software is configured on the same server as a Clarity PACS, the iClarity viewer has access to the entire Clarity archive from an iPhone, iPad or iPod Touch.

Clarity Advanced Toolset

Adds a collection of annotation tools to aid Orthopedic and Chiropractors in analyzing an x-ray image.

Clarity Advanced Hanging Protocols

Provides the user with customization capability on how a particular study should consistently be displayed when
it is opened.

Clarity DICOM Report Writer

Allows the user to create a report in DICOM structured report format.

- Text Expansion
- Image Inclusion
- Report Templates
- VRS compatible.

Clarity HL7 & Message Broker

Acquisition software supporting DICOM 3.0 may query Clarity PACS for the modality
worklist, and send procedure status updates back to the PACS.

CLARIS XT

The Next Dimension of 3D Imaging

IMAGE CAPTURE REVIEW

140 Pixel Pitch | **16 Bit** | **430 x 430mm Sensor**

The **Claris XT CBC**T captures diagnostic studies with ultra large 17” by 17” detectors while providing the functionality of a traditional x-ray room. With its cesium sensor technology, studies for abdominal, chest, dental, and orthopedic applications are available through one streamlined workflow. The **Claris XT** captures high detailed chest information as well as studies expected from a traditional x-ray room. The **Claris XT’s** low dose tomosynthesis modality provides low dose studies and high patient throughput. The **Claris XT** simplifies workflow minimizing cost and shorter treatment time. The result for the **Claris XT** is a streamlined, all-in-one cone beam CT machine that addresses emergency care, surgical planning and general imaging needs.

Compact
The Claris XT is highly compact and can fit into almost any small clinic or mobile practice.

Mobile
With both the gantry and table equipped with wheel, the Claris XT can be moved around effortlessly.

Lightweight
Weighing in at only 500lbs, the Claris XT is perfect for those needing an easily portable imaging device.

Low Power
The Claris XT only requires a simple 220V power source to acquire premium 3D images.

SCAN TIME
30 seconds Standard Resolution
60 seconds High Resolution

CLARIS XT Specifications*

X-ray Source	High frequency, constant potential (DC), rotating anode Tube Power: 5kW (e.g. 100kV, 50mA) Tube Power: 18 kW (e.g. 120 kV, 150 mA) Max. Tube Voltage: 120 kV Max. Tube Current: 100 mA Focal Spot Size: 300 µm / 600 µm	
Acquisition Technique	X-ray, pulsed series, and Pulsed Fluoroscopy	
Scan Time Tomosynthesis	30 Seconds 2X2 binning, 60 seconds 1X1 binning	
Image Detector	17x17" amorphous SiTFT w/ CsI(Tl) 140 µm pixel pitch	
Possible Single Image Resolution	3072x3072 1536x1536 1024x1024	Volume of Interest Selectable up to 25X25X25 CM
Grey Scale	16 bit (65,536 gray levels)	
Voxel Size	≥ 85 µm	

**Processing and display time dependent on processor speed, RAM disk access time, and video card.*

Patient Position	Supine	Motorized Table	
Reconstruction	<3 minutes		
Weight and Dimensions	**Scan Unit**	Width	60"
		Depth (max)	116" (with patient bed)
		Height	60"
		Total Weight	500 lb (with patient bed)
		Bore	31" / 28"
Patient Table Load Capacity	135Kg		
Software	XC-CBCT acquisition workstation with export capabilities to PACs and multiple viewing software. DICOM Compatible		
Power Required	220-250VAC 50/60Hz. 30 A		

Transport and Storage Conditions		Working Conditions	
Range of Temperature	0° – 50° C	**Range of Temperature**	10° – 35° C
Relative Humidity	20 – 90 %	**Relative Humidity**	30 – 75 %
Atmospheric Pressure	700 – 1060 HPA	**Atmospheric Pressure**	700 – 1060 HPA

ICRCO, INC. | 26 COROMAR DRIVE, GOLETA, CA 93117 USA | ICRCO.COM | 310.921.9559 | INFO@ICRCOMPANY.COM